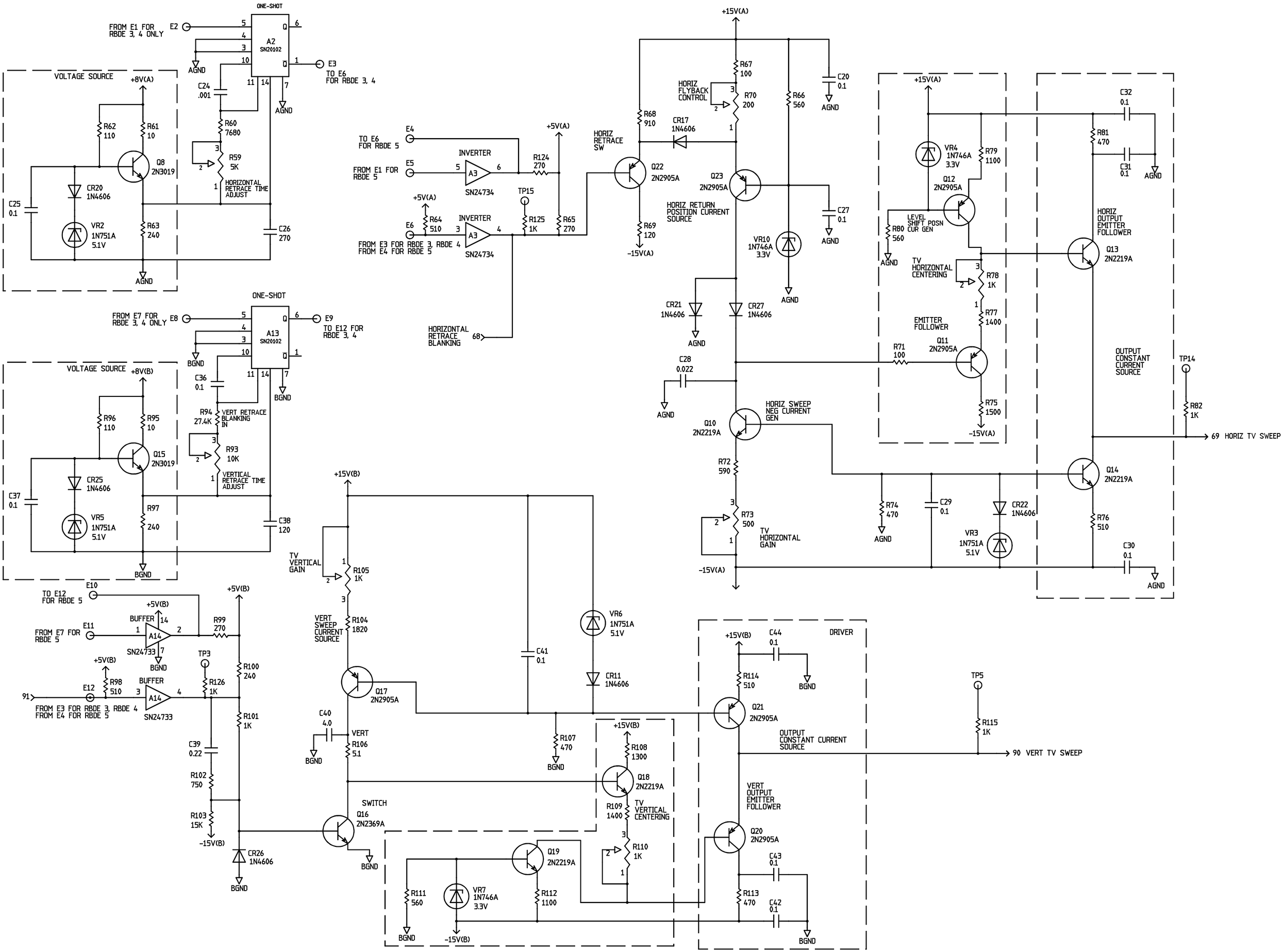
ONE-SHOT
A2
SN20102
FROM E1 FOR RBDE 3, 4 ONLY
E2
E3
TO E6 FOR RBDE 3, 4
AGND
C24 .001
VOLTAGE SOURCE
+8V(A)
R62 110
R61 10
Q8 2N3019
CR20 1N4606
C25 0.1
VR2 1N751A 5.1V
R63 240
R60 7680
R59 5K
HORIZONTAL RETRACE TIME ADJUST
C26 270
ONE-SHOT
A13
SN20102
FROM E7 FOR RBDE 3, 4 ONLY
E8
E9
TO E12 FOR RBDE 3, 4
BGND
C36 0.1
VOLTAGE SOURCE
+8V(B)
R96 110
R95 10
Q15 2N3019
CR25 1N4606
C37 0.1
VR5 1N751A 5.1V
R97 240
R94 27.4K
VERT RETRACE BLANKING IN
R93 10K
VERTICAL RETRACE TIME ADJUST
C38 120
TO E12 FOR RBDE 5
E10
FROM E7 FOR RBDE 5
E11
BUFFER
A14
SN24733
R99 270
+5V(B)
R98 510
E12
91
FROM E3 FOR RBDE 3, RBDE 4
FROM E4 FOR RBDE 5
TP3
R126 1K
R100 240
R101 1K
C39 0.22
R102 750
R103 15K
-15V(B)
CR26 1N4606
E4
TO E6 FOR RBDE 5
E5
FROM E1 FOR RBDE 5
INVERTER
A3
SN24734
R124 270
TP15
R125 1K
R65 270
R64 510
E6
FROM E3 FOR RBDE 3, RBDE 4
FROM E4 FOR RBDE 5
HORIZONTAL RETRACE BLANKING
68
+15V(A)
HORIZ RETRACE SW
R68 910
Q22 2N2905A
R69 120
-15V(A)
R67 100
HORIZ FLYBACK CONTROL
R70 200
CR17 1N4606
R66 560
C20 0.1
Q23 2N2905A
HORIZ RETURN POSITION CURRENT SOURCE
C27 0.1
VR10 1N746A 3.3V
CR21 1N4606
CR27 1N4606
C28 0.022
Q10 2N2219A
HORIZ SWEEP NEG CURRENT GEN
R72 590
R73 500
TV HORIZONTAL GAIN
VR4 1N746A 3.3V
R79 1100
Q12 2N2905A
LEVEL SHIFT POSN CUR GEN
R80 560
TV HORIZONTAL CENTERING
R78 1K
R77 1400
EMITTER FOLLOWER
Q11 2N2905A
R71 100
R75 1500
R74 470
C29 0.1
CR22 1N4606
VR3 1N751A 5.1V
C32 0.1
R81 470
C31 0.1
HORIZ OUTPUT EMITTER FOLLOWER
Q13 2N2219A
OUTPUT CONSTANT CURRENT SOURCE
TP14
R82 1K
69 HORIZ TV SWEEP
Q14 2N2219A
R76 510
C30 0.1
TV VERTICAL GAIN
R105 1K
VERT SWEEP CURRENT SOURCE
R104 1820
Q17 2N2905A
C40 4.0
VERT
R106 5.1
SWITCH
Q16 2N2369A
C41 0.1
VR6 1N751A 5.1V
CR11 1N4606
R107 470
R108 1300
Q18 2N2219A
R109 1400
TV VERTICAL CENTERING
R110 1K
Q19 2N2219A
R111 560
VR7 1N746A 3.3V
R112 1100
-15V(B)
DRIVER
C44 0.1
R114 510
Q21 2N2905A
OUTPUT CONSTANT CURRENT SOURCE
TP5
R115 1K
90 VERT TV SWEEP
VERT OUTPUT EMITTER FOLLOWER
Q20 2N2905A
C43 0.1
R113 470
C42 0.1