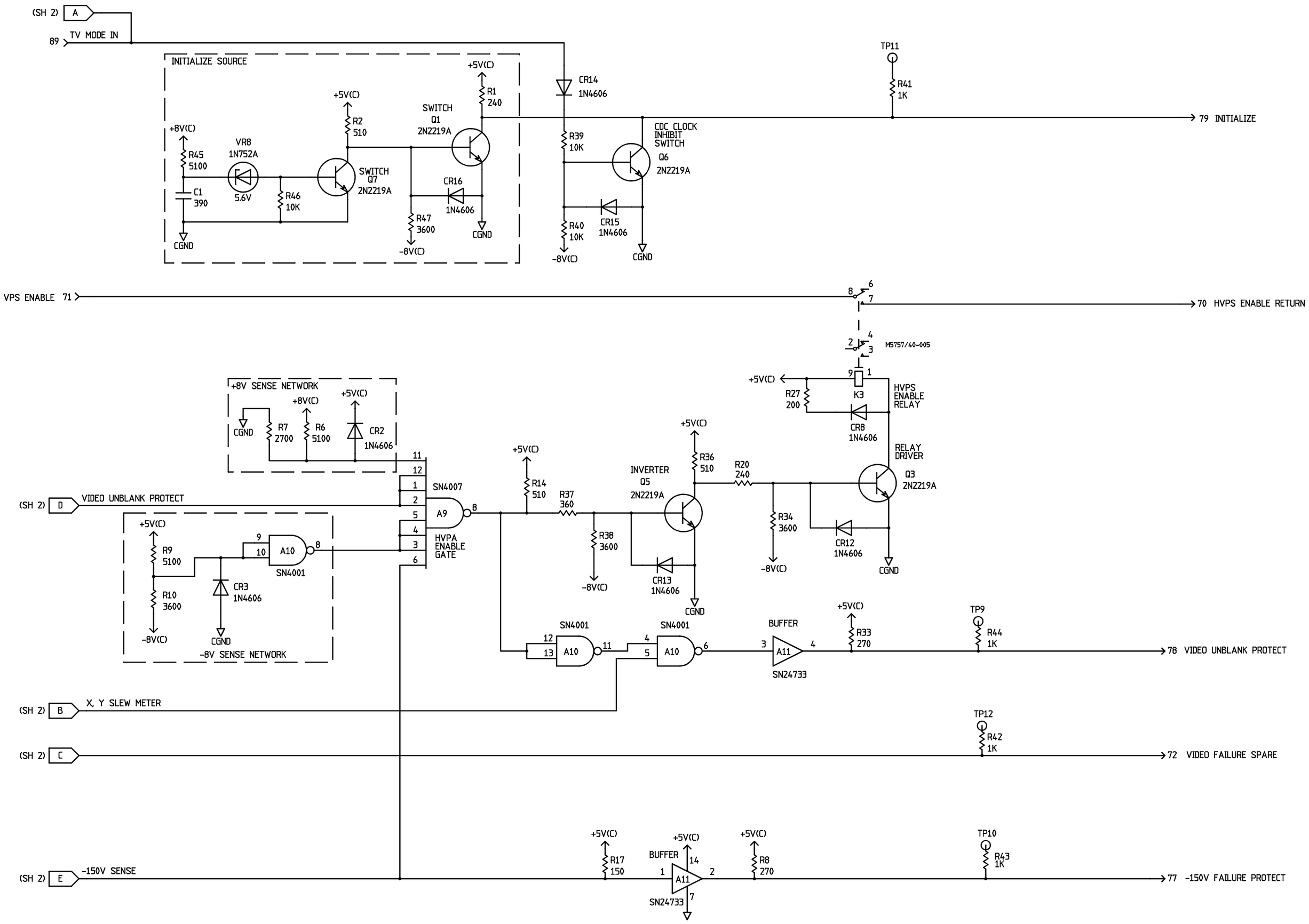
(SH 2) A
89 TV MODE IN
INITIALIZE SOURCE
+5V(C)
R1 240
SWITCH Q1 2N2219A
+5V(C)
R2 510
+8V(C)
R45 5100
VR8 1N752A
5.6V
C1 390
R46 10K
SWITCH Q7 2N2219A
CR16 1N4606
R47 3600
-8V(C)
CGND
CGND
CR14 1N4606
R39 10K
R40 10K
-8V(C)
CDC CLOCK INHIBIT SWITCH Q6 2N2219A
CR15 1N4606
CGND
TP11
R41 1K
79 INITIALIZE
VPS ENABLE 71
70 HVPS ENABLE RETURN
M5757/40-005
+5V(C)
R27 200
K3
HVPS ENABLE RELAY
CR8 1N4606
RELAY DRIVER
Q3 2N2219A
CR12 1N4606
CGND
+8V SENSE NETWORK
+8V(C)
+5V(C)
CGND
R7 2700
R6 5100
CR2 1N4606
(SH 2) D VIDEO UNBLANK PROTECT
SN4007
A9
HVPA ENABLE GATE
+5V(C)
R9 5100
R10 3600
-8V(C)
CR3 1N4606
CGND
A10
SN4001
-8V SENSE NETWORK
+5V(C)
R14 510
R37 360
R38 3600
-8V(C)
INVERTER Q5 2N2219A
+5V(C)
R36 510
CR13 1N4606
CGND
R20 240
R34 3600
-8V(C)
SN4001
A10
SN4001
A10
BUFFER
A11
SN24733
+5V(C)
R33 270
TP9
R44 1K
78 VIDEO UNBLANK PROTECT
(SH 2) B X, Y SLEW METER
TP12
R42 1K
(SH 2) C
72 VIDEO FAILURE SPARE
(SH 2) E -150V SENSE
+5V(C)
R17 150
BUFFER
A11
SN24733
+5V(C)
+5V(C)
R8 270
TP10
R43 1K
77 -150V FAILURE PROTECT