US006543172B1

(12) **United States Patent**
Armstrong

(10) **Patent No.: US 6,543,172 B1**
(45) **Date of Patent: Apr. 8, 2003**

(54) **BUTTSTOCK ASSEMBLY WITH REMOVABLE AND SEALABLE STORAGE TUBES**

(75) Inventor: **David P. Armstrong**, Bloomington, IN (US)

(73) Assignee: **The United States of America as represented by the Secretary of the Navy**, Washington, DC (US)

(*) Notice: Subject to any disclaimer, the term of this patent is extended or adjusted under 35 U.S.C. 154(b) by 0 days.

(21) Appl. No.: **10/052,858**

(22) Filed: **Jan. 23, 2002**

(51) **Int. Cl.**[7] **F41C 23/00**
(52) **U.S. Cl.** **42/71.01**
(58) **Field of Search** 42/71.01, 90, 72; 89/1.42

(56) **References Cited**

U.S. PATENT DOCUMENTS

746,859 A * 12/1903 Marble 42/6
1,266,024 A * 5/1918 Kennedy 42/71.01
1,489,677 A * 4/1924 Stampfli 42/71.01
2,298,678 A * 10/1942 Chase 42/71.01
2,667,005 A * 1/1954 Weis 42/74
3,618,248 A * 11/1971 Into et al. 42/71.01
4,512,101 A * 4/1985 Waterman, Jr. 42/71.01
5,755,055 A * 5/1998 Thompson et al. 42/71.01

* cited by examiner

Primary Examiner—Michael J. Carone
Assistant Examiner—M. Thomson
(74) *Attorney, Agent, or Firm*—James B. Bechtel, Esq.; Peter J. Van Bergen, Esq.

(57) **ABSTRACT**

A buttstock assembly has a buttstock that holds a plurality of removable and sealable tubes. The buttstock has a butt plate, an elongated body extending perpendicularly away from the butt plate, and a structural web coupled to the butt plate and elongated body. The elongated body defines a central cavity and an elongated cavity on either side thereof. Each tube is sealable and forms a sliding fit with one elongated cavity.

20 Claims, 3 Drawing Sheets

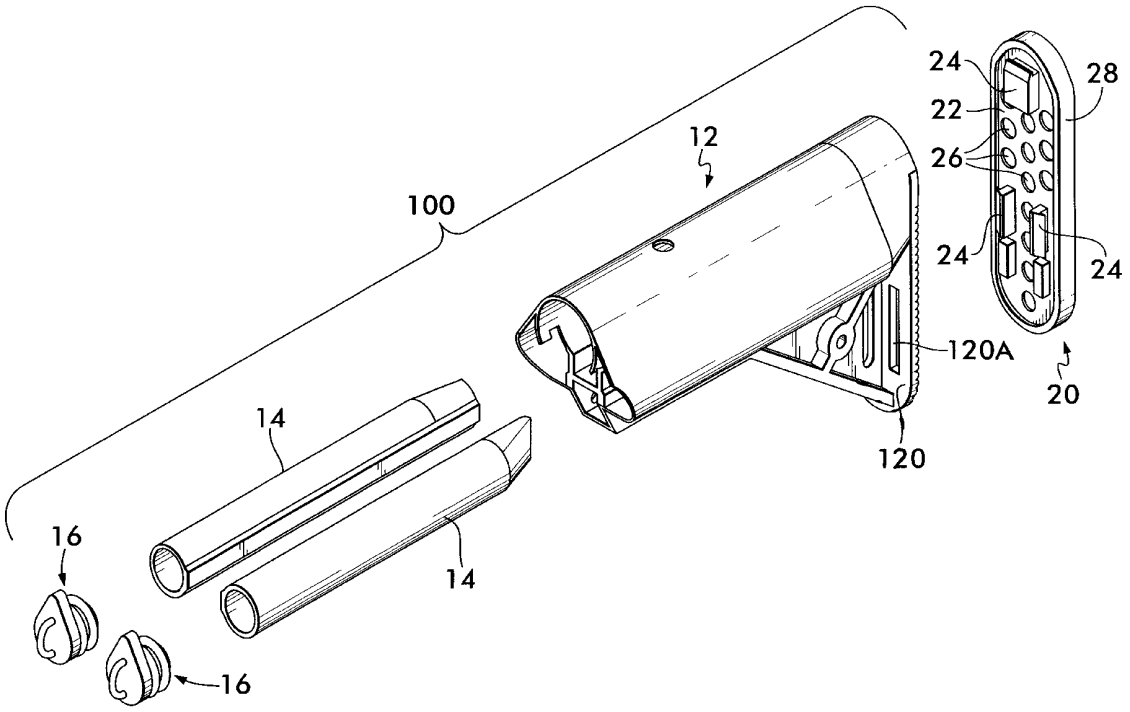

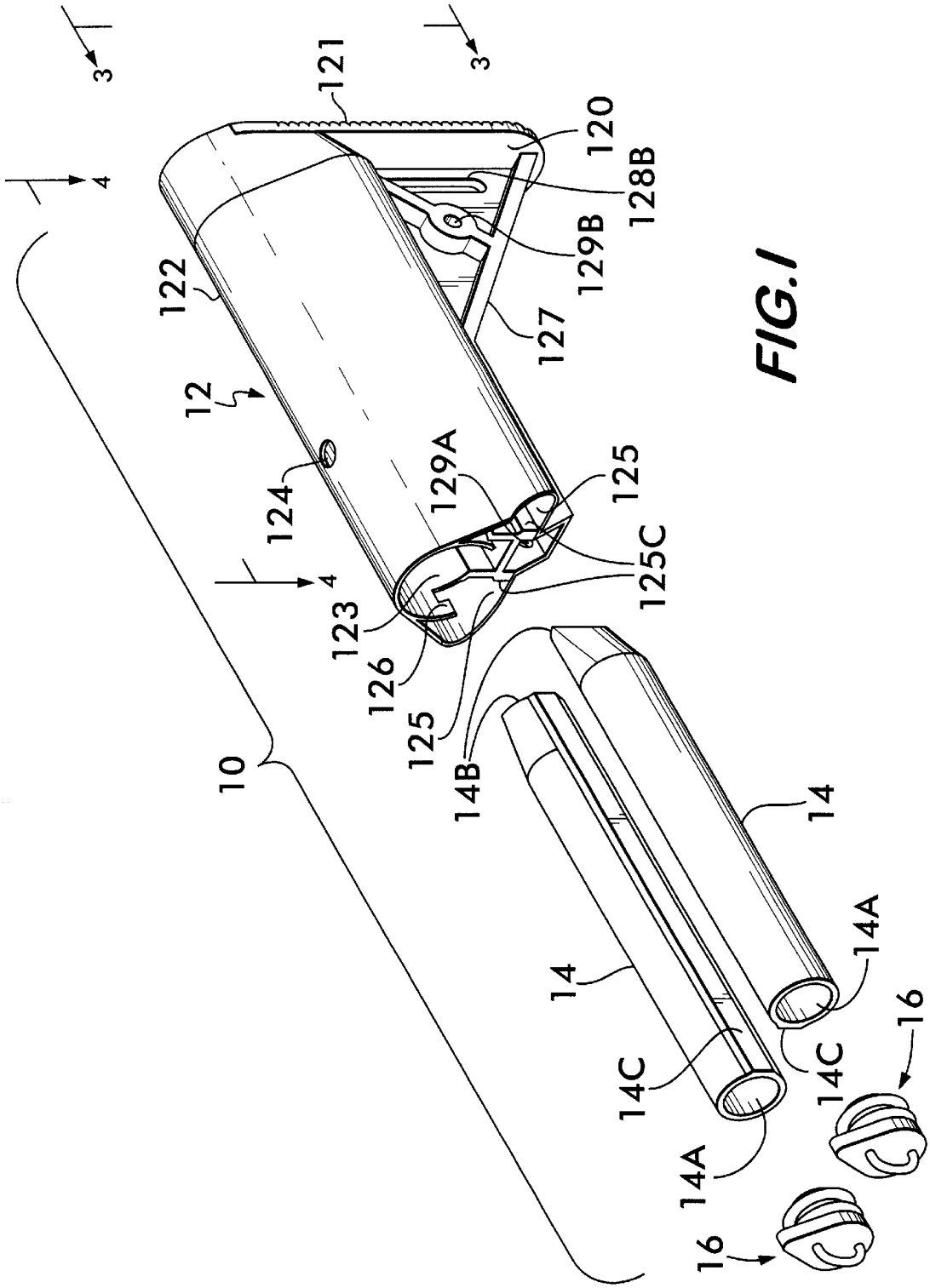
3
3
121
120
128B
129B
127
122
12
124
129A
125
125C
4
4
123
126
125
14B
10
14
14A
14C
14
14C
14A
16
16

FIG. 1

FIG.2

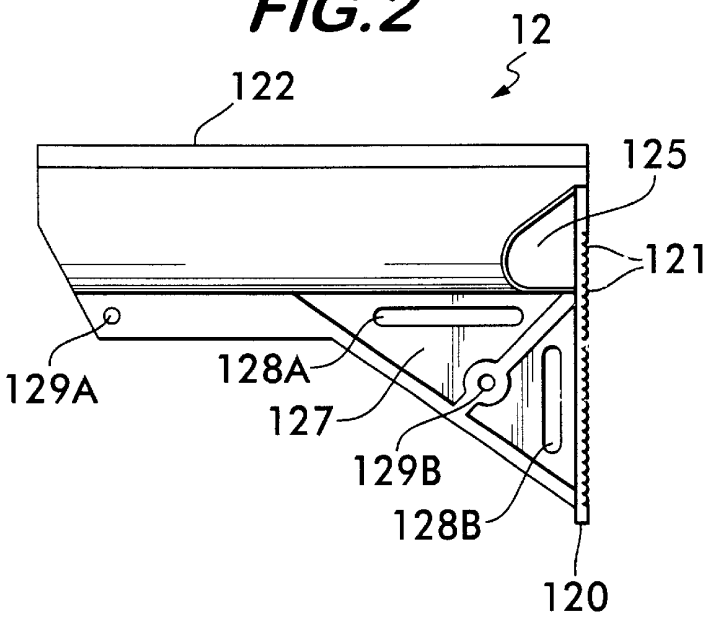

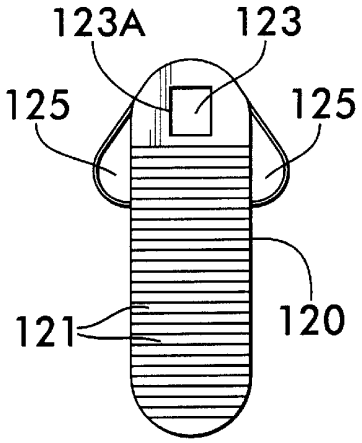

FIG.3

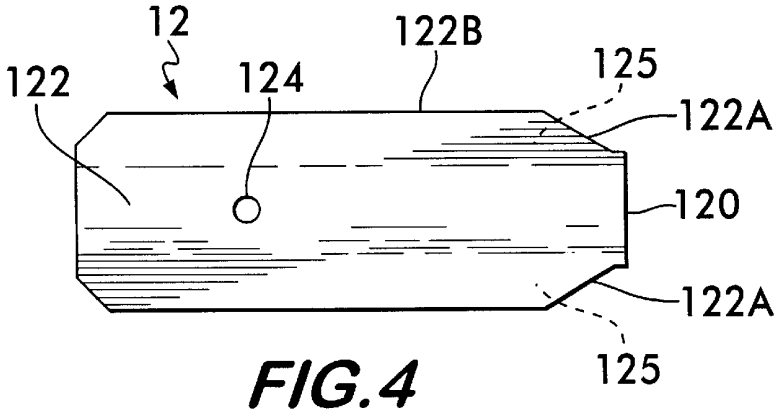

FIG.4

FIG.5

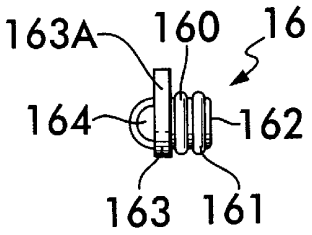

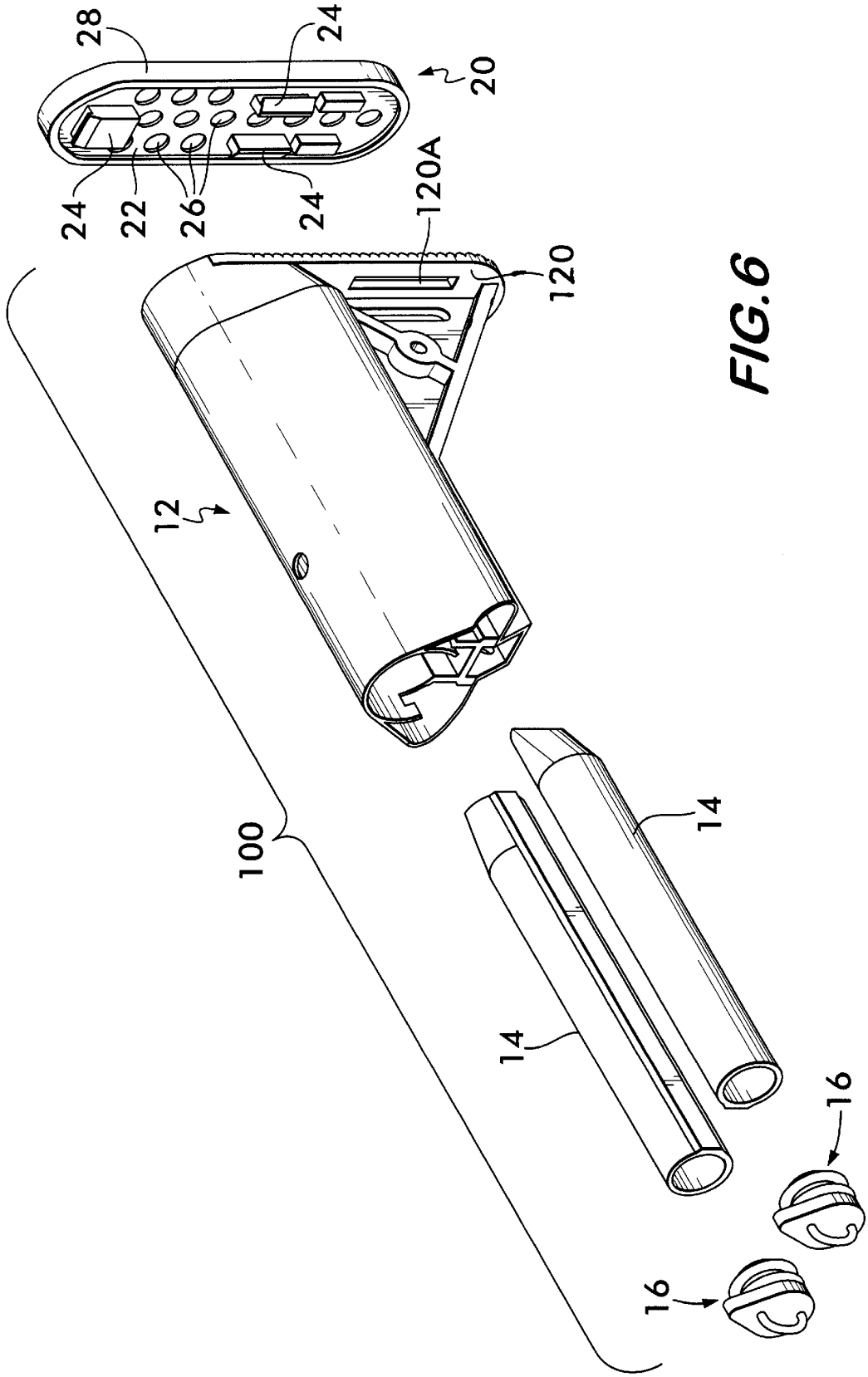

FIG. 6

BUTTSTOCK ASSEMBLY WITH REMOVABLE AND SEALABLE STORAGE TUBES

ORIGIN OF THE INVENTION

The invention described herein was made in the performance of official duties by an employee of the Department of the Navy and may be manufactured, used, licensed by or for the Government for any governmental purpose without payment of any royalties thereon.

FIELD OF THE INVENTION

The invention relates generally to buttstocks for attachment to firearms, and more particularly to a buttstock assembly that has removable storage tubes which can be sealed from the outside environment.

BACKGROUND OF THE INVENTION

For several military applications and/or operational groups, weapons may need to be collapsible for ease of transportation to a field venue, and then easily assembled in the field. For example, rifles are frequently designed to be collapsible. One typical portion of a collapsible rifle assembly is the buttstock that forms the aft-most part of the assembled rifle. In general, the buttstock must be ergonomic since the buttstock forms the interface with the user's shoulder area. Further, the buttstock can provide additional functionality such as a storage area since the buttstock does not generally contain any of the rifle's operating components. The storage area should provide a watertight and dirt-free environment. Still further, a good buttstock design should minimize the use of moving parts that can cause rattle noises, break, fall off, etc.

SUMMARY OF THE INVENTION

Accordingly, it is an object of the present invention to provide a buttstock assembly for a collapsible rifle.

Another object of the present invention is to provide a buttstock assembly having watertight and dirt-free storage areas.

Yet another object of the present invention is to provide an ergonomic buttstock assembly that is comfortable for a user over a range of shooting positions.

Other objects and advantages of the present invention will become more obvious hereinafter in the specification and drawings.

In accordance with the present invention, a buttstock assembly for attachment to a rifle includes a buttstock that lo holds a plurality of removable and sealable tubes. In its simplest embodiment, the buttstock has i) a butt plate, ii) an elongated body extending perpendicularly away from the butt plate, and iii) a structural web coupled to the butt plate and elongated body. The elongated body defines a central cavity for receiving therein a portion of the rifle and further defines an elongated cavity on either side of and parallel to the central cavity. Each tube is open on one end thereof and forms a sliding fit with one elongated cavity. A cap is provided for sealing the open end of the tube.

BRIEF DESCRIPTION OF THE DRAWINGS

FIG. **1** is an exploded perspective view of the buttstock assembly in accordance with an embodiment of the present invention;

FIG. **2** is an isolated side view of the buttstock portion of the assembly shown in FIG. **1**;

FIG. **3** is an aft end view of the buttstock taken along line **3—3** of FIG. **1**;

FIG. **4** is an isolated top view of the buttstock portion of the assembly taken along line **4—4** of FIG. **1**;

FIG. **5** is an isolated side view of one of the tube's sealing caps; and

FIG. **6** is an exploded perspective view of the buttstock assembly in accordance with another embodiment of the present invention.

DETAILED DESCRIPTION OF THE INVENTION

Referring now to the drawings, and more particularly to FIG. **1**, an embodiment of the buttstock assembly in accordance lo with the present invention is illustrated and referenced generally by numeral **10**. While buttstock assembly **10** will be described for its use with one of the U.S. Navy's M**16** collapsible-stock carbine-type weapons (e.g., the M**4A1** carbine), it is to be understood that the novel features thereof can be implemented in any buttstock assembly.

Buttstock assembly **10** has three separable components referred to herein as a buttstock **12**, a storage tube **14** (two of which are shown and can be used), and a tube cap **16** for sealing each tube **14**. In describing buttstock **12**, additional and simultaneous reference will be made to FIGS. **2–4** where side, aft end and top views, respectively, of just buttstock **12** are shown.

Buttstock **12** has a butt plate **120** forming the interface with a user's shoulder or, as in a later described embodiment, forming an attachment plate for a recoil pad. In the illustrated embodiment, butt plate **120** has ridges **121** formed therein along its aft face (illustrated in FIG. **3**) to minimize slippage when buttstock **12** is pressed against a user's shoulder.

Extending perpendicular to and forward from butt plate **120** is the buttstock's body **122** which defines a plurality of longitudinal cavities along its length. At its central portion, body **122** defines a central cavity **123** for attachment to the aft end of a weapon which could be the weapon's receiver or, as in the case the M**16** carbines, a specially-provided tubular extension. Accordingly, the shape and size of cavity **123** will be dependent on the type of weapon to which the present invention will be joined. Typically, means are provided for securing the weapon to body **122**. In terms of the M**4A1** carbine rifle (not shown), its extension tube is inserted into central cavity **123**. One of several holes in the extension tube is aligned with a through hole **124** that passes vertically through buttstock **12**. The hole on the M**4A1**'s extension tube that is aligned with hole **124** has a lockpin (not shown) passed therethrough to lock the rifle and buttstock **12** to one another. This method of attachment is well known in the art and is not a part of or a limiting feature of the present invention. The aft end of cavity **123** (visible in FIG. **3**) can be open or partially open at **123**A to facilitate the cleaning of cavity **123** should it become dirty.

Disposed on either side of and parallel to cavity **123** are tube cavities **125**. Although not a requirement of the present invention, each of tube cavities **125** is identically sized and shaped to allow their usage with either of storage tubes **14**. Each of tube cavities **125** is fully open or accessible at the forward end thereof (visible in FIG. **1**) and can be partially open or accessible at the aft end thereof (visible in FIG. **3**). By making the aft end of each tube cavity **125** accessible, cleaning of the cavities is facilitated as is the removal of storage tubes **14** as will be explained further below. A tab **126** can be formed at the fully open end of each cavity **125** to retain tube **14** and its cap **16** as will be explained further below.

As best seen in FIG. **4**, the width of body **122** can be such that it increases gradually at either side thereof starting at butt plate **120**. Specifically, the width of body **122** at its aft end is equal to that of butt plate **120** and then increases in a straightline angled fashion at **122**A to a constant width at **122**B. The ergonomic shaping of body **122** in this way allows the user to comfortably pivot buttstock **12** about butt plate **120** when butt plate **120** is pressed against a user's shoulder.

For structural rigidity of buttstock **12**, butt plate **120** and body **122** are coupled to one another by a structural web **127**. For a preferred construction of the present invention, buttstock **12** is molded from plastic (e.g., nylon) or cast in metal as a single unit so that web **127** is integral with butt plate **120** and body **122**. In addition to its structural function, web **127** can be used to provide the means to couple a rifle sling thereto. For example, slots **128**A and **128**B can be cut through web **127** to provide the user with a variety of options for threading a rifle sling therethrough. Slots **128**A and **128**B are oriented perpendicular to one another with slot **128**A being parallel and adjacent to body **122** and slot **128**B being parallel to and adjacent butt plate **120**. In addition to slots **128**A and **128**B, a plurality of circular holes **129**A and **129**B can be provided through web **127**. Holes **129**A and **129**B accommodate a standard sling swivel stud (not shown) to which the end of a rifle sling can be attached.

Referring again to FIG. **1**, each of tubes **14** is identically sized and shaped for use with either of tube cavities **125**. Each tube **14** is open at one end **14**A and is sealed at its other end **14**B. The external size and shape of tube **14** is configured to slidingly engage the internal size and shape of tube cavity **125**. The internal size and shape of tube **14** is configured to accommodate the items (not shown) to be stored therein. In the illustrated example, cavity **125** and tube **14** are keyed or indexed to one another to prevent relative rotation therebetween. More specifically, tube **14** is cylindrically shaped in its longitudinal exterior except for a flat portion **14**C thereof that matches a flat portion **125**C of cavity **125**. The internal shape of tubes **14** can be cylindrical as shown. In the illustrated example, tubes **14** are made to fully fill cavity **125**. Accordingly, since body **122** tapers in width at its aft end as shown in FIG. **4**, end **14**B of tube **14** must be correspondingly shaped to accommodate the tapering width of cavity **125** at its aft end. Note that this shaping of end **14**B can be eliminated if the length of tube **14** is such that it will not extend into the decreasing width portion of body **122**. Each tube **14** has its own sealing cap **16** which, when attached to tube **14**, should make tube **14** a watertight storage compartment. While a variety of sealing systems can be used, FIG. **5** illustrates an embodiment of cap **16** which utilizes two O-rings **160** and **161** supported on a cylindrical stem **162** that extends from an end plate **163**. A finger grip **164** extends from the opposite side of end plate **163**. End plate **163** incorporates a tab **163**A extending radially outward therefrom for reasons that will be explained below.

In operation, stem **162** of cap **16** is pressed into tube **14** until end plate **163** abuts open end **14**A. While O-rings **160** and **161** insure a snug and sealing fit with tube **14**, cap **16** can be rotated while in tube **14**. Tube **14** is then aligned with one of cavities **125** so that flat portions **14**C and **125**C match up. Tube **14** is then slid fully into cavity **125** and cap **16** is rotated until tab **163**A engages tab **126** of buttstock **12**. The procedures is simply reversed to remove and un-cap tube **14**. Note that if the aft end of tube cavities **125** is open, tubes **14** can be pushed therefrom if need be.

Referring now to FIG. **6**, another embodiment of the present invention is shown and referenced generally by numeral **100**. Assembly **100** adds a recoil pad **20** to the components described above for assembly **10**. Accordingly, components common to each of assemblies **10** and **100** will be identified with the same reference numerals and will not be described again for assembly **100**.

Recoil pad **20** is added to provide a more ergonomic and comfortable interface with a user's shoulder as opposed to the rigid interface provided by butt plate **120**. In the illustrated embodiment, recoil pad **20** is constructed from a rigid (e.g., plastic) frame **22** having a plurality of attachment tabs **24** extending therefrom that will be used to attach recoil pad **20** to butt plate **120** without the use of any tools. Accordingly, mounting holes, such as **120**A are provided in butt plate **120** to accommodate attachment tabs **24**. The particular number and/or design of attachment tabs **26** and corresponding mounting holes are not limitations of the present invention. A plurality of holes **26** can be formed in frame **22**. A rubber pad **28** is over-molded onto frame **22** with the rubber therefrom filling each of holes **26** during the over-mold process to keep rubber pad **28** on frame **22**.

The advantages of the present invention are numerous. The butt stock assembly provides removable and interchangeable watertight storage tubes that are easily stored in and retained by the buttstock. Various ergonomic features (e.g., various sling position accommodation, the ability to pivot the butt stock comfortably on one's shoulder, etc.) will improve user satisfaction with the weapon to which the buttstock assembly is attached. The buttstock assembly further minimizes moving parts to reduce noise and breakage concerns.

Although the invention has been described relative to a specific embodiment thereof, there are numerous variations and modifications that will be readily apparent to those skilled in the art in light of the above teachings. It is therefore to be understood that, within the scope of the appended claims, the invention may be practiced other than as specifically described.

What is claimed as new and desired to be secured by Letters Patent of the United States is:

1. A buttstock assembly for attachment to a rifle, comprising:

a buttstock having i) a butt plate, ii) an elongated body extending perpendicularly away from said butt plate, said elongated body defining a central cavity for receiving therein a portion of said rifle and further defining an elongated cavity on either side of and parallel to said central cavity, and iii) a structural web coupled to said butt plate and said elongated body;

a tube open on one end thereof and forming a sliding fit with each said elongated cavity; and

a cap for sealing said one end of each said tube.

2. A buttstock assembly as in claim **1** further comprising a recoil pad coupled to said butt plate.

3. A buttstock assembly as in claim **1** wherein each said elongated cavity and an outer surface of each said tube are indexed to one another.

4. A buttstock assembly as in claim **1** wherein said cap is rotatable relative to said tube, said cap further comprising a tab extending radially outward therefrom wherein, when said tube is fitted in said elongated cavity with said cap sealing said one end of said tube, said cap can be rotated such that said tab engages a portion of said elongated body.

5. A buttstock assembly as in claim **1** wherein said web defines a first slotted hole parallel to said butt plate and a second slotted hole parallel to said elongated body.

6. A buttstock assembly as in claim **1** wherein said web defines a plurality of circular holes for receiving therein a sling swivel stud of a rifle sling assembly.

7. A buttstock assembly as in claim **1** wherein said buttstock is made from plastic.

8. A buttstock assembly as in claim **2** wherein said recoil pad comprises:

a rigid frame for attachment to said butt plate; and

a rubber pad over-molded onto said frame.

9. A buttstock assembly for attachment to a rifle, comprising:

a molded buttstock having i) a butt plate, ii) an elongated body extending perpendicularly away from said butt plate, said elongated body being equal in width to said butt plate at said butt plate and gradually increasing in width at either side thereof to a fixed width a distance from said butt plate, said elongated body defining a central cavity for receiving therein a portion of said rifle and further defining an open-ended elongated cavity on either side of and parallel to said central cavity, and iii) a structural web coupled to said butt plate and said elongated body;

a tube open on one end thereof and forming a sliding fit with each said elongated cavity;

a cap for sealing said one end of each said tube; and

a recoil pad attachable to said butt plate.

10. A buttstock assembly as in claim **9** wherein each said elongated cavity and an outer surface of each said tube are indexed to one another.

11. A buttstock assembly as in claim **9** wherein said cap is rotatable relative to said tube, said cap further comprising a tab extending radially outward therefrom wherein, when said tube is fitted in said elongated cavity with said cap sealing said one end of said tube, said cap can be rotated such that said tab engages a portion of said elongated body.

12. A buttstock assembly as in claim **9** wherein said web defines a first slotted hole parallel to and adjacent said butt plate and a second slotted hole parallel to and adjacent said elongated body.

13. A buttstock assembly as in claim **9** wherein said web defines a plurality of circular holes for receiving therein a sling swivel stud of a rifle sling assembly.

14. A buttstock assembly as in claim **9** wherein said buttstock is made from plastic.

15. A buttstock assembly as in claim **9** wherein said recoil pad comprises:

a rigid plastic frame having a plurality of tabs integral therewith and extending therefrom for engagement with said butt plate; and

a rubber pad over-molded onto said plastic frame.

16. A buttstock assembly for attachment to a rifle, comprising:

a molded buttstock having i) a butt plate, ii) an elongated body extending perpendicularly away from said butt plate, said elongated body being equal in width to said butt plate at said butt plate and gradually increasing in width at either side thereof to a fixed width a distance from said butt plate, said elongated body defining a central cavity for receiving therein a portion of said rifle and further defining an elongated cavity on either side of and parallel to said central cavity with each said elongated cavity being fully accessible at a first end thereof and partially accessible at a second end thereof, and iii) a structural web coupled to said butt plate and said elongated body, said web defining a first slotted hole parallel to and adjacent said butt plate and a second slotted hole parallel to and adjacent said elongated body;

a tube open on one end thereof for longitudinal insertion into either said elongated cavity at said first end thereof, said tube forming a sliding fit with said elongated cavity;

a cap for sealing said one end of each said tube and for being rotatable relative to said tube, said cap further comprising a tab extending radially outward therefrom wherein, when said tube is fitted in said elongated cavity with said cap sealing said one end of said tube, said cap can be rotated such that said tab engages a portion of said elongated body to prevent longitudinal movement of said tube and said cap; and

a recoil pad attachable to said butt plate.

17. A buttstock assembly as in claim **16** wherein each said elongated cavity and an outer surface of each said tube are indexed to one another to prevent relative rotational movement therebetween.

18. A buttstock assembly as in claim **16** wherein said web further defines a plurality of circular holes for receiving therein a sling swivel stud of a rifle sling assembly.

19. A buttstock assembly as in claim **16** wherein said buttstock is made from plastic.

20. A buttstock assembly as in claim **16** wherein said recoil pad comprises:

a rigid plastic frame having a plurality of tabs integral therewith and extending therefrom for engagement with said butt plate; and

a rubber pad over-molded onto said plastic frame.

* * * * *