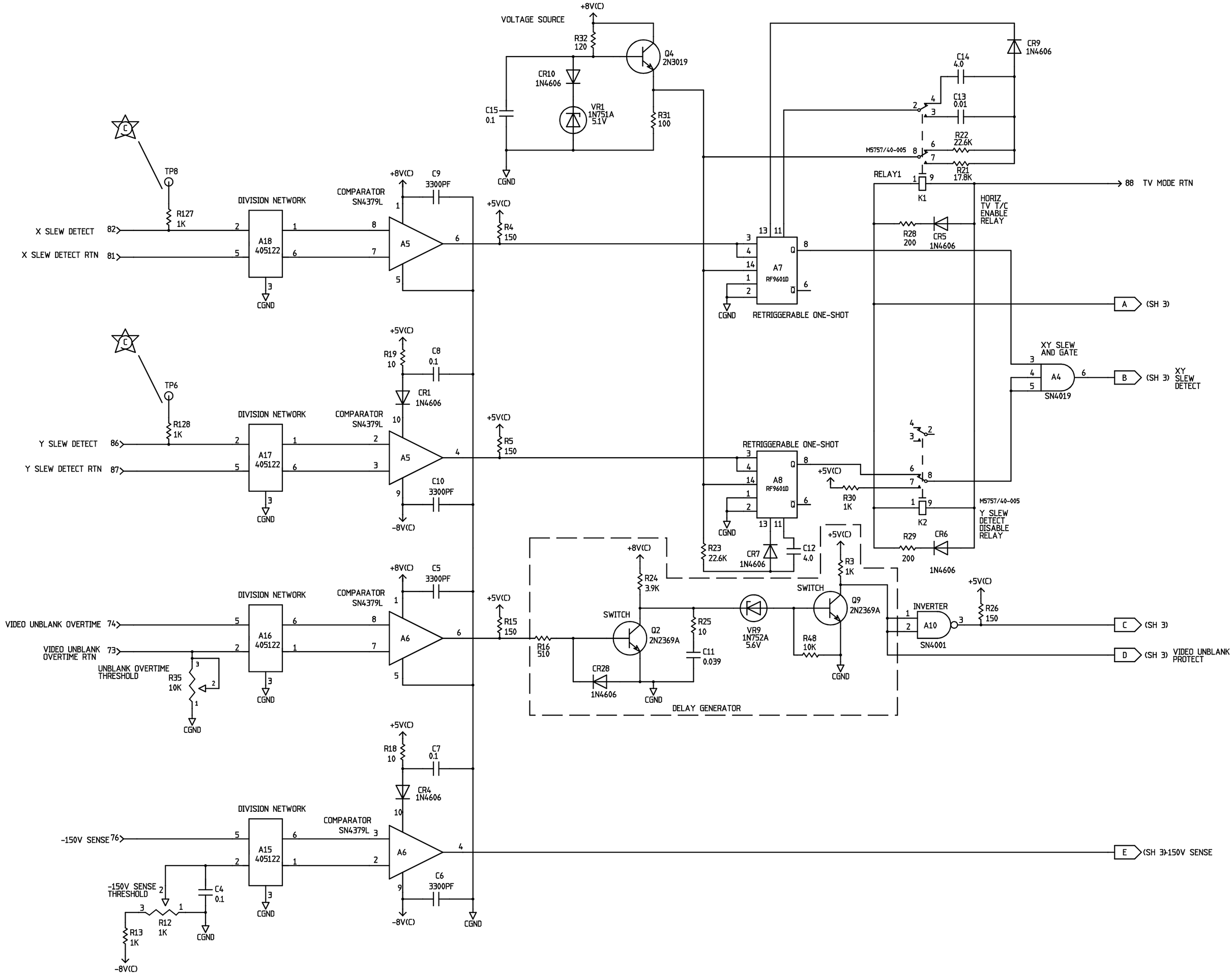
VOLTAGE SOURCE
+8V(C)
R32 120
Q4 2N3019
CR10 1N4606
VR1 1N751A 5.1V
R31 100
C15 0.1
CGND
CR9 1N4606
C14 4.0
C13 0.01
R22 22.6K
R21 17.8K
M5757/40-005
RELAY1
K1
88 TV MODE RTN
HORIZ TV T/C ENABLE RELAY
R28 200
CR5 1N4606
TP8
R127 1K
X SLEW DETECT 82
X SLEW DETECT RTN 81
DIVISION NETWORK
A18 405122
COMPARATOR SN4379L
A5
C9 3300PF
+5V(C)
R4 150
A7 RF9601D
RETRIGGERABLE ONE-SHOT
A (SH 3)
XY SLEW AND GATE
A4 SN4019
B (SH 3) XY SLEW DETECT
TP6
R128 1K
Y SLEW DETECT 86
Y SLEW DETECT RTN 87
A17 405122
R19 10
C8 0.1
CR1 1N4606
R5 150
C10 3300PF
-8V(C)
A8 RF9601D
R30 1K
K2
Y SLEW DETECT DISABLE RELAY
R29 200
CR6 1N4606
R23 22.6K
CR7 1N4606
C12 4.0
R3 1K
VIDEO UNBLANK OVERTIME 74
VIDEO UNBLANK OVERTIME RTN 73
UNBLANK OVERTIME THRESHOLD
R35 10K
A16 405122
C5 3300PF
R15 150
R16 510
R24 3.9K
SWITCH
Q2 2N2369A
R25 10
C11 0.039
CR28 1N4606
VR9 1N752A 5.6V
R48 10K
Q9 2N2369A
DELAY GENERATOR
INVERTER
A10 SN4001
R26 150
C (SH 3)
D (SH 3) VIDEO UNBLANK PROTECT
-150V SENSE 76
A15 405122
R18 10
C7 0.1
CR4 1N4606
C6 3300PF
E (SH 3)-150V SENSE
-150V SENSE THRESHOLD
C4 0.1
R12 1K
R13 1K