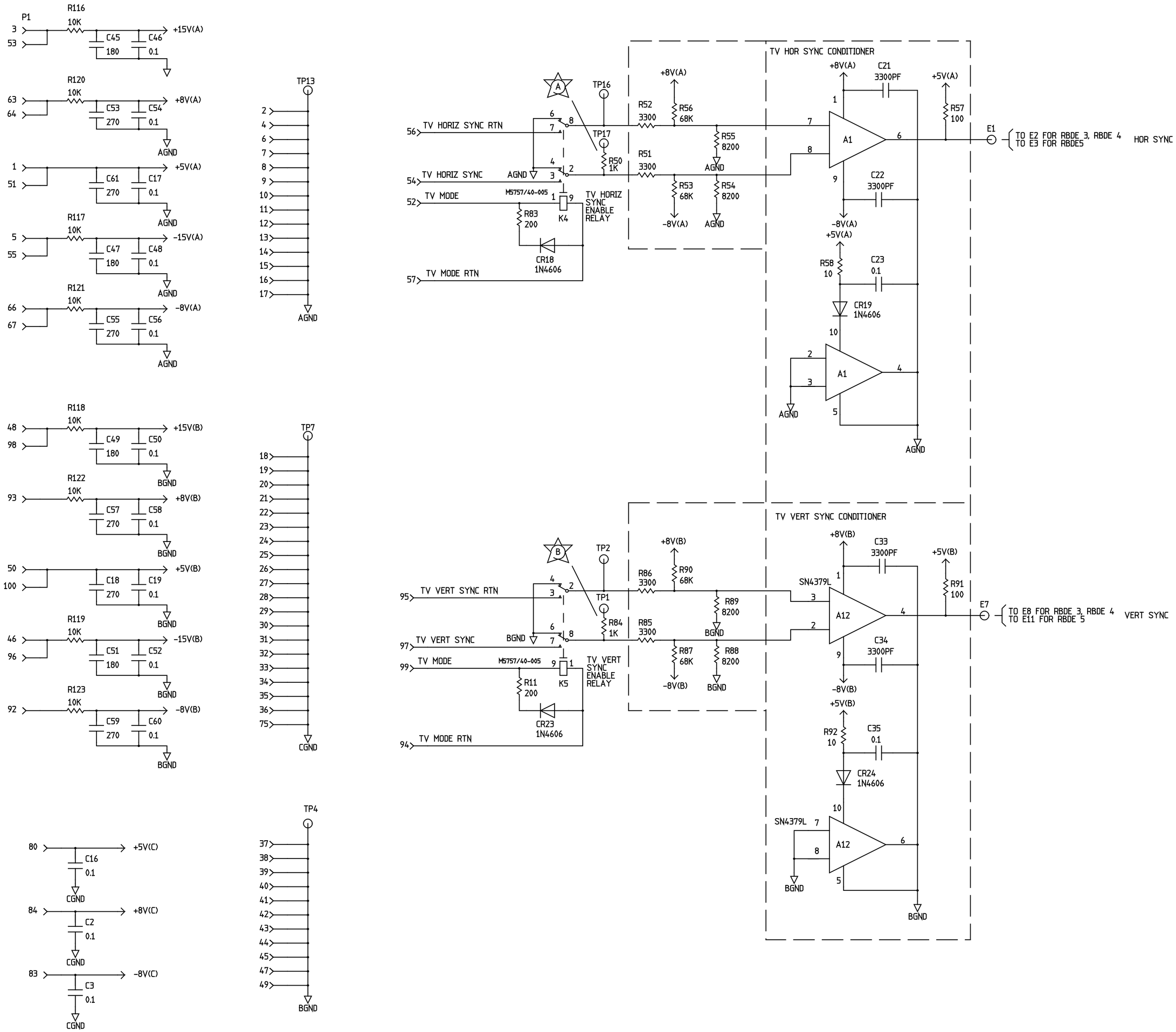
P1
R116 10K
3
53
C45 180
C46 0.1
+15V(A)
R120 10K
63
64
C53 270
C54 0.1
+8V(A)
AGND
1
51
C61 270
C17 0.1
+5V(A)
AGND
R117 10K
5
55
C47 180
C48 0.1
-15V(A)
AGND
R121 10K
66
67
C55 270
C56 0.1
-8V(A)
AGND
TP13
2
4
6
7
8
9
10
11
12
13
14
15
16
17
AGND
R118 10K
48
98
C49 180
C50 0.1
+15V(B)
BGND
R122 10K
93
C57 270
C58 0.1
+8V(B)
BGND
50
100
C18 270
C19 0.1
+5V(B)
BGND
R119 10K
46
96
C51 180
C52 0.1
-15V(B)
BGND
R123 10K
92
C59 270
C60 0.1
-8V(B)
BGND
TP7
18
19
20
21
22
23
24
25
26
27
28
29
30
31
32
33
34
35
36
75
CGND
80
C16 0.1
+5V(C)
CGND
84
C2 0.1
+8V(C)
CGND
83
C3 0.1
-8V(C)
CGND
TP4
37
38
39
40
41
42
43
44
45
47
49
BGND
TV HORIZ SYNC RTN
56
TV HORIZ SYNC
54
TV MODE
52
TV MODE RTN
57
A
TP16
TP17
R50 1K
AGND
MS757/40-005
R83 200
K4
CR18 1N4606
TV HORIZ SYNC ENABLE RELAY
R52 3300
R51 3300
+8V(A)
R56 68K
R55 8200
AGND
R53 68K
R54 8200
-8V(A)
AGND
TV HOR SYNC CONDITIONER
+8V(A)
C21 3300PF
+5V(A)
R57 100
A1
C22 3300PF
-8V(A)
+5V(A)
R58 10
C23 0.1
CR19 1N4606
A1
AGND
AGND
E1
TO E2 FOR RBDE 3, RBDE 4
TO E3 FOR RBDE5
HOR SYNC
TV VERT SYNC RTN
95
TV VERT SYNC
97
TV MODE
99
TV MODE RTN
94
B
TP2
TP1
R84 1K
BGND
MS757/40-005
R11 200
K5
CR23 1N4606
TV VERT SYNC ENABLE RELAY
R86 3300
R85 3300
+8V(B)
R90 68K
R89 8200
BGND
R87 68K
R88 8200
-8V(B)
BGND
TV VERT SYNC CONDITIONER
+8V(B)
C33 3300PF
+5V(B)
R91 100
SN4379L
A12
C34 3300PF
-8V(B)
+5V(B)
R92 10
C35 0.1
CR24 1N4606
SN4379L
A12
BGND
BGND
E7
TO E8 FOR RBDE 3, RBDE 4
TO E11 FOR RBDE 5
VERT SYNC