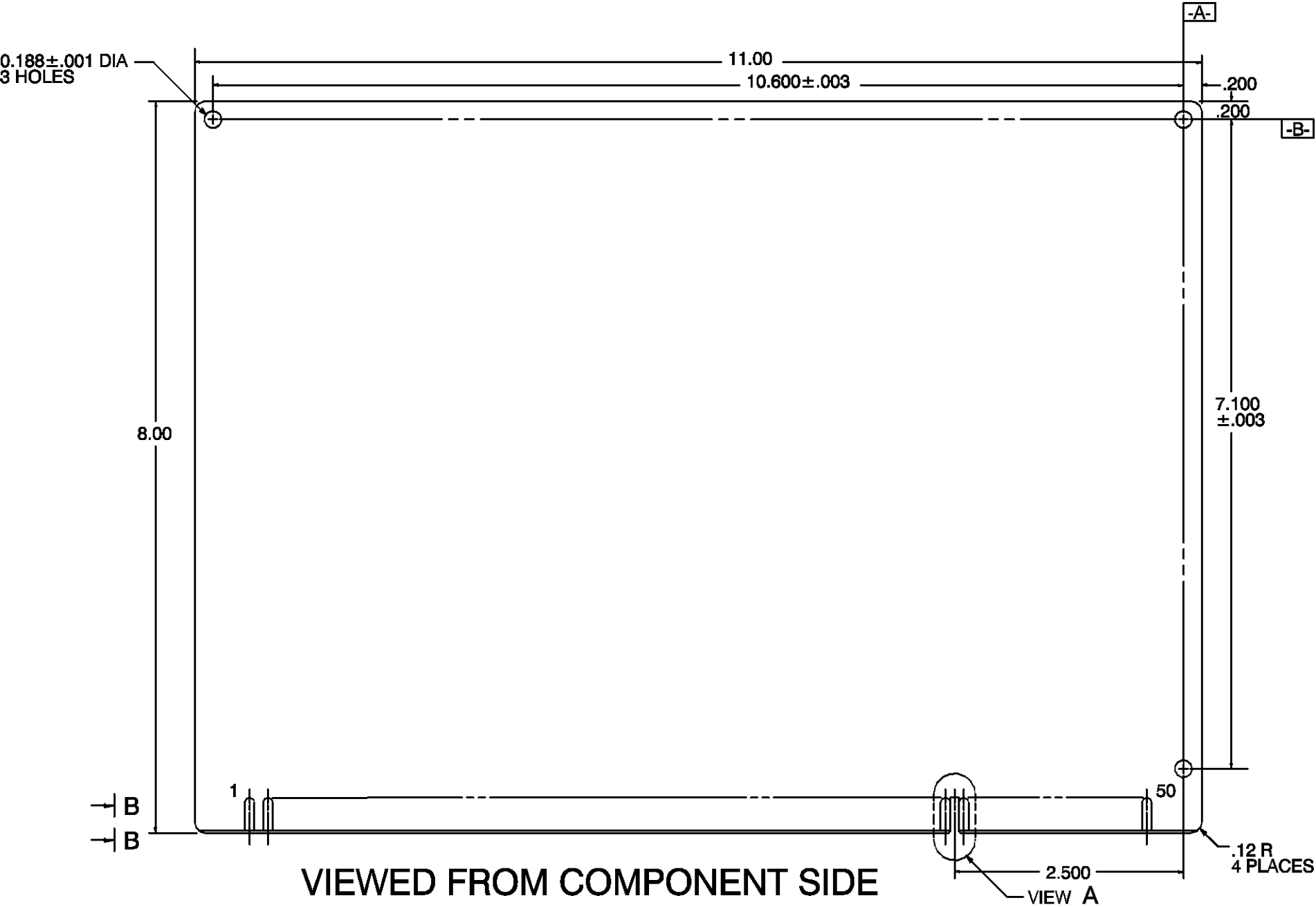


VIEWED FROM COMPONENT SIDE

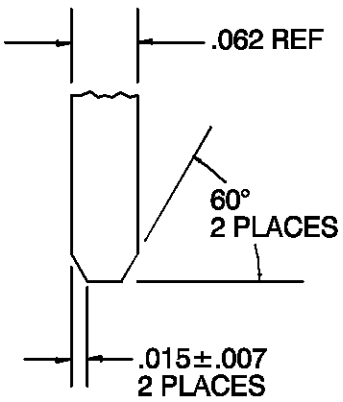


VIEW B-B

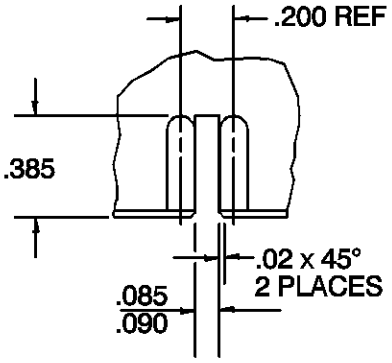


VIEW A

SLOT SHALL NOT REDUCE AREA
OF ADJACENT CONTACT FINGERS