DRAWING SIZE F

NOTES:-
1-THIS DRAWING IS FOR INFORMATION ONLY-NOT TO BE USED FOR MANUFACTURE.
2-COMBAT SLING REMOVED FOR CLARITY.
3-ALL DIMENSIONS ARE GIVEN AS MAXIMUM REFERENCES.

REVISIONS			
SYM	DESCRIPTION	DATE	APPROVAL
D	NOR G4S3093 / 940811	950907	DR
E	NOR L8S2015 980812	980901	TPT

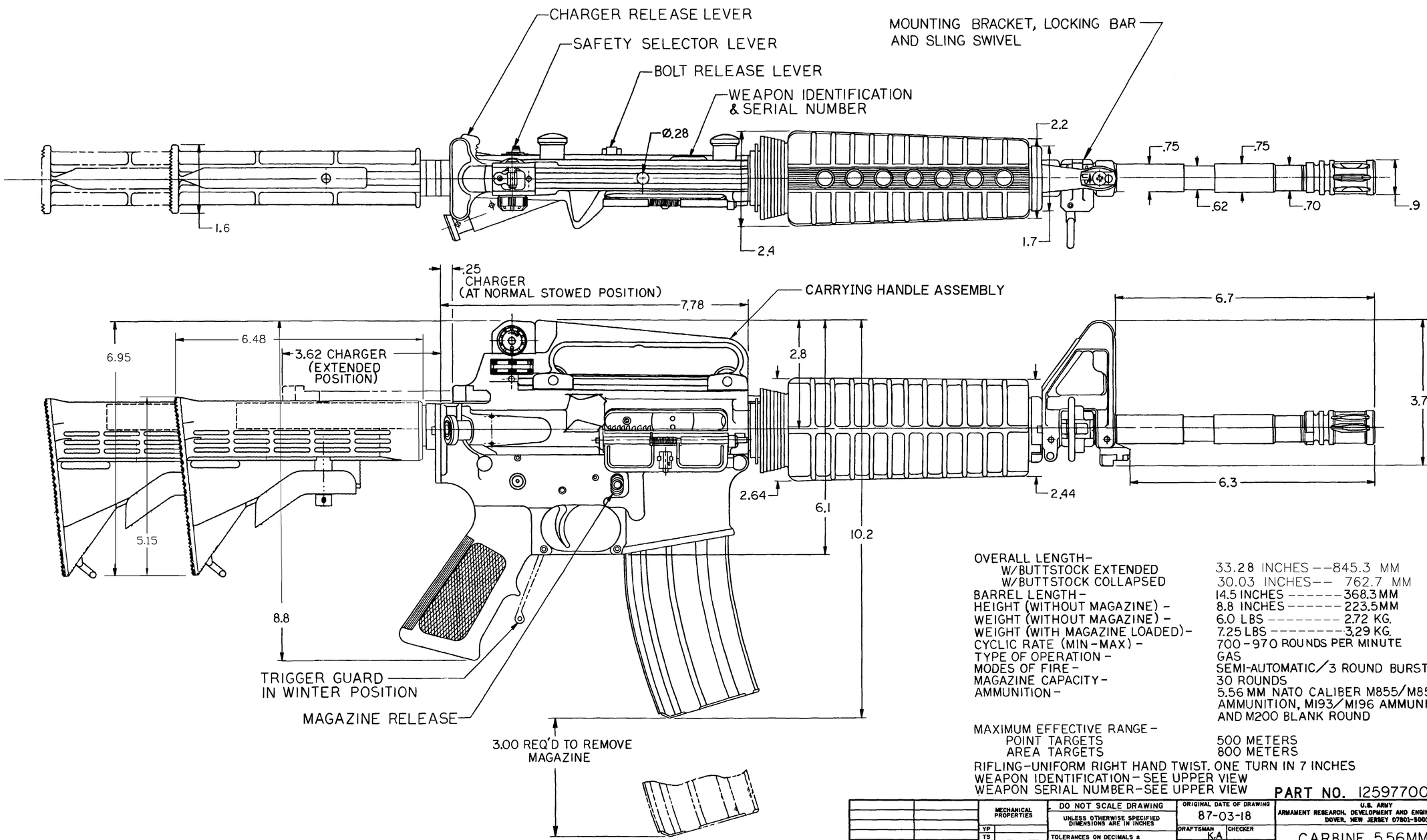

OVERALL LENGTH-	
W/BUTTSTOCK EXTENDED	33.28 INCHES--845.3 MM
W/BUTTSTOCK COLLAPSED	30.03 INCHES-- 762.7 MM
BARREL LENGTH-	14.5 INCHES ------368.3MM
HEIGHT (WITHOUT MAGAZINE) -	8.8 INCHES ------223.5MM
WEIGHT (WITHOUT MAGAZINE) -	6.0 LBS --------2.72 KG.
WEIGHT (WITH MAGAZINE LOADED)-	7.25 LBS --------3.29 KG.
CYCLIC RATE (MIN-MAX) -	700-970 ROUNDS PER MINUTE
TYPE OF OPERATION -	GAS
MODES OF FIRE -	SEMI-AUTOMATIC/3 ROUND BURST
MAGAZINE CAPACITY -	30 ROUNDS
AMMUNITION -	5.56 MM NATO CALIBER M855/M856 AMMUNITION, M193/M196 AMMUNITION AND M200 BLANK ROUND
MAXIMUM EFFECTIVE RANGE -	
POINT TARGETS	500 METERS
AREA TARGETS	800 METERS

RIFLING-UNIFORM RIGHT HAND TWIST. ONE TURN IN 7 INCHES
WEAPON IDENTIFICATION- SEE UPPER VIEW
WEAPON SERIAL NUMBER-SEE UPPER VIEW

PART NO. 12597700

9390000	M4		
NEXT ASSY	USED ON		
APPLICATION			

MECHANICAL PROPERTIES: YP, TS, EL2, RA, BH, RH

DO NOT SCALE DRAWING
UNLESS OTHERWISE SPECIFIED DIMENSIONS ARE IN INCHES
TOLERANCES ON DECIMALS ±
FRACTIONS ± ANGLES ±
THIRD ANGLE PROJECTION

ORIGINAL DATE OF DRAWING 87-03-18
DRAFTSMAN K.A CHECKER
ENGR ENGR
ENGR ENGR

U.S. ARMY
ARMAMENT RESEARCH, DEVELOPMENT AND ENGINEERING CENTER
DOVER, NEW JERSEY 07801-5001

CARBINE, 5.56MM, M4
(ENVELOPE DRAWING)

SIZE F | FSCM NO. 19200 | 12597700
SCALE 1/1 | UNIT WT. | SHEET

SMCAR FORM 69, 1 JUN 86(TEMP) REPLACES SMCAR FORM 69, 1 FEB 85, WHICH MAY BE USED UNTIL EXHAUSTED

REVISION HISTORY				
ZONE	REV	DESCRIPTION	DATE	APPROVED
	–	PRODUCT BASELINE ERR L9S3010	990622	RJC

NOTES:

1. APPLICABLE STANDARDS/SPECIFICATIONS:
   A. MIL–STD–100
   B. ASME Y14.5M–1994

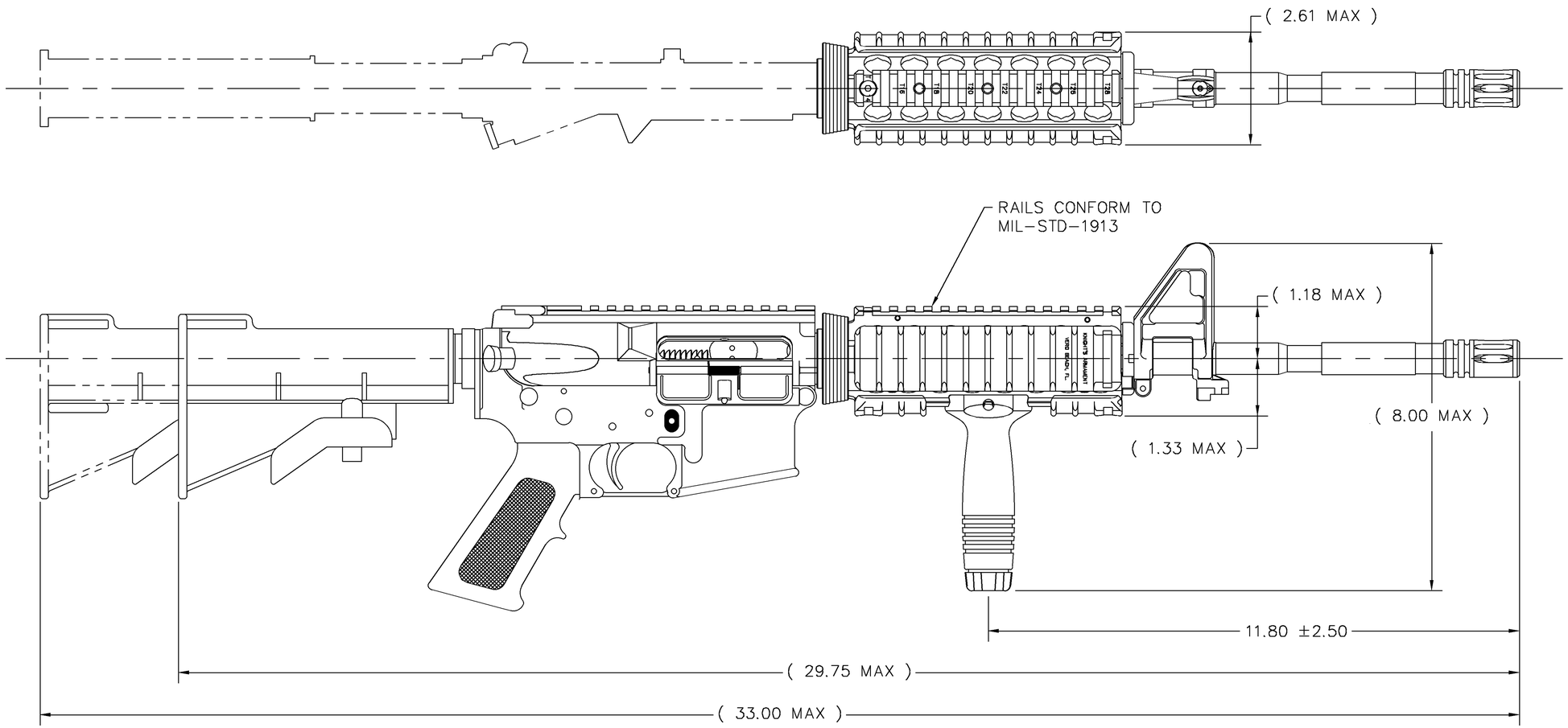

ENVELOPE DRAWING

PART NO.

DISTRIBUTION STATEMENT A
APPROVED FOR PUBLIC RELEASE;
DISTRIBUTION IS UNLIMITED

MECHANICAL PROPERTIES	
YP	
TS	
EL2	
RA	
BH	
RH	

NEXT ASSY	USED ON
APPLICATION	

DO NOT SCALE DRAWING

UNLESS OTHERWISE SPECIFIED DIMENSIONS ARE IN INCHES

TOLERANCES ON DECIMALS ±
FRACTIONS ± ANGLES ±

THIRD ANGLE PROJECTION

ORGINAL DATE OF DRAWING: 98–10–05

DRAWN BY	CHECKER
MGA	
ENGINEER	ENGINEER
ENGINEER	ENGINEER

DRAWING APPROVAL

DESIGN APPROVAL

U. S. ARMY
ARMAMENT RESEARCH, DEVELOPMENT AND ENGINEERING CENTER
PICATINNY ARSENAL, NEW JERSEY 07806–5000

M4 CARBINE,
M4 ADAPTER RAIL SYSTEM

SIZE	CAGE CODE	DRAWING NO.	REV
D	19200	12973113	–

SCALE NONE SHEET 1 OF 1

DWG NO. 12973113

NOTES: -

1- THIS DRAWING IS FOR INFORMATION ONLY NOT TO BE USED FOR MANUFACTURE.

2- ALL DIMENSIONS ARE GIVEN AS MAX REFERENCE.

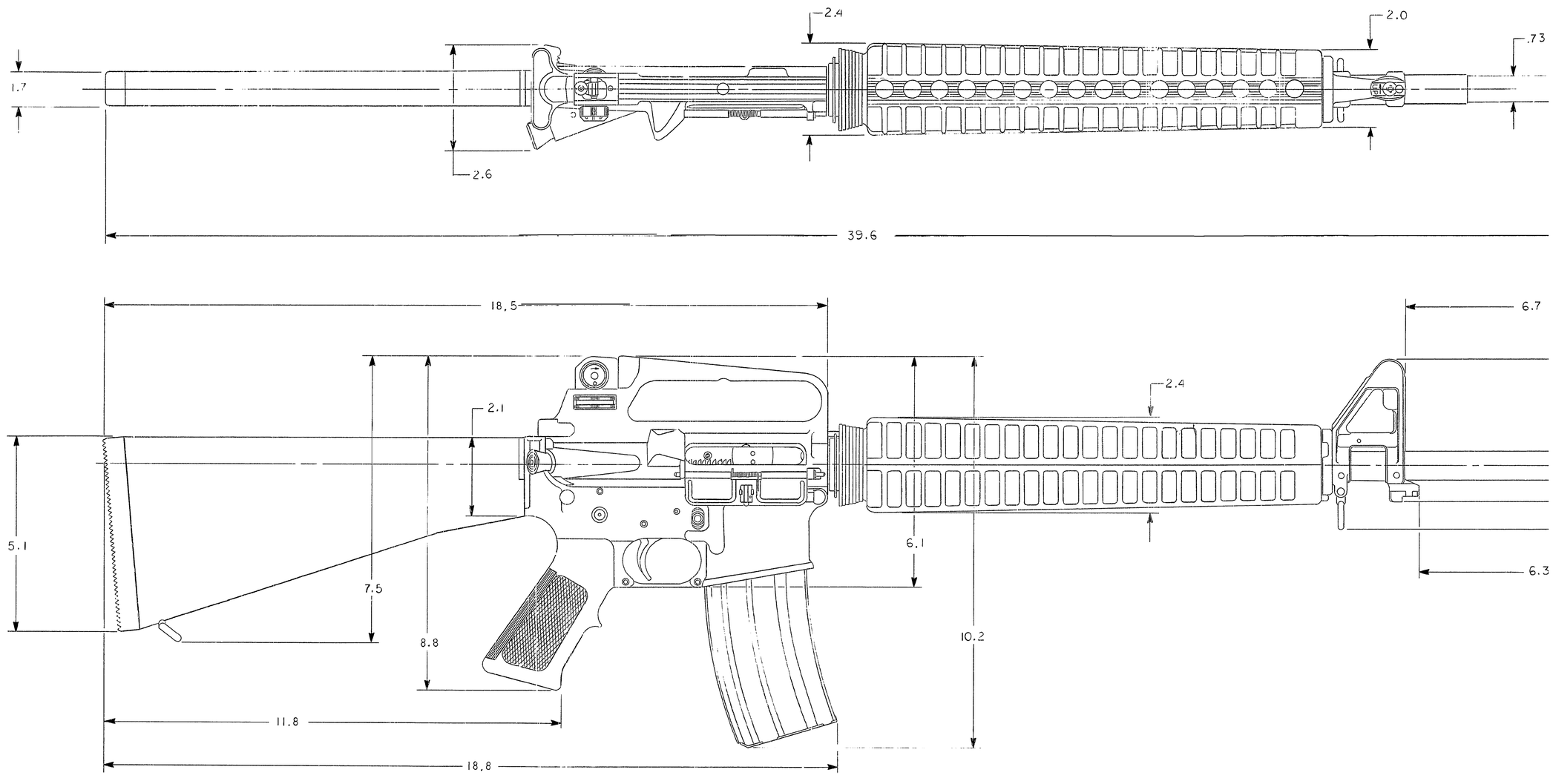

J9381436

REV. A

F1/2

		MECHANICAL PROPERTIES	DO NOT SCALE DRAWING	ORIGINAL DA 83
		YP	UNLESS OTHERWISE SPECIFIED DIMENSIONS ARE IN INCHES	DRAFTSMAN
		TS	TOLERANCES ON DECIMALS ±	ENGR
		EL2	FRACTIONS ± ANGLES ±	ENGR
		RA		
		BH		
NEXT ASSY	USED ON	RH		
APPLICATION				

REVISIONS			
SYM	DESCRIPTION	DATE	APPROVAL
—	PRODUCTION RELEASE ERRW4S2502	840216	R Adl
A	NOF 67 [illegible]	[illegible]	[illegible]

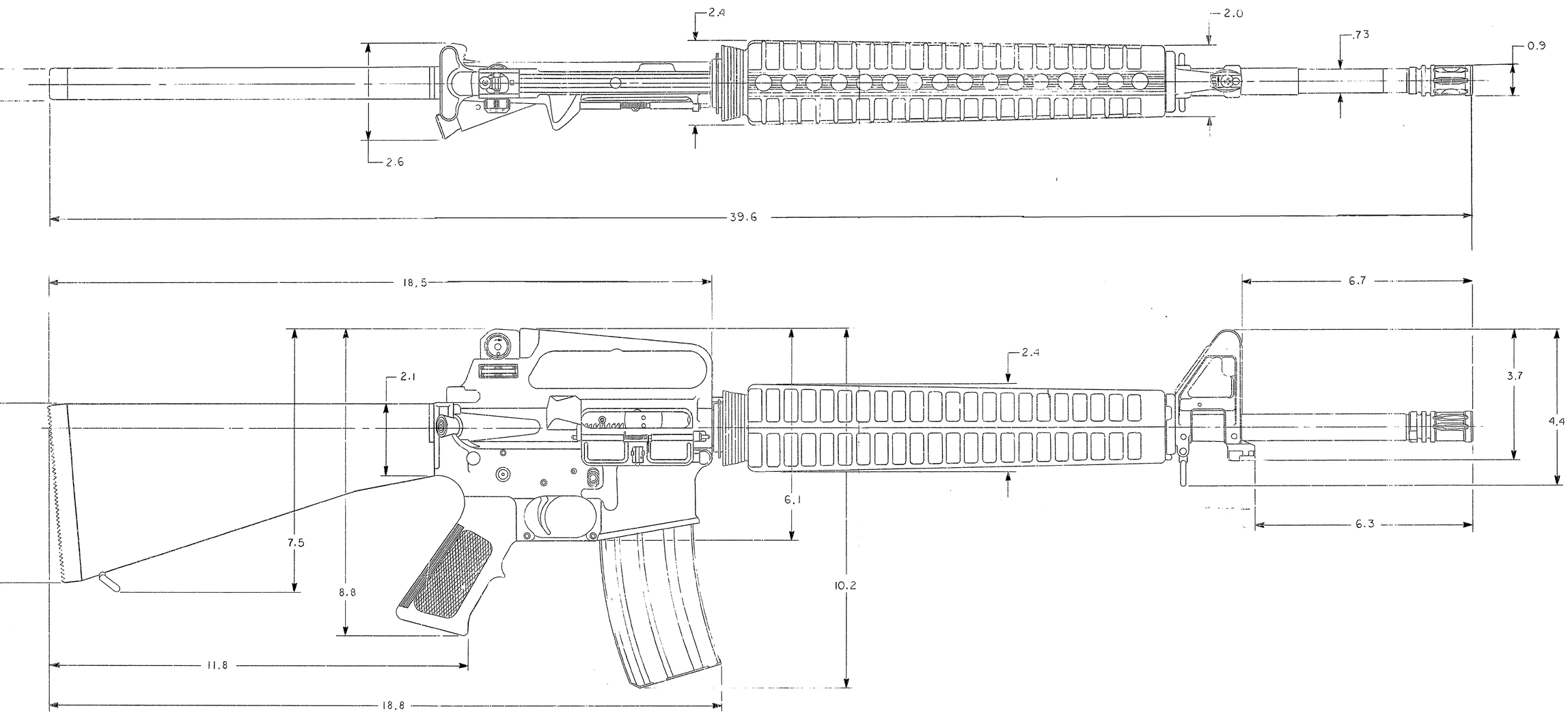

J9381436

F2/2

REV./A

PART NO. 9381436

NEXT ASSY	USED ON	MECHANICAL PROPERTIES	DO NOT SCALE DRAWING UNLESS OTHERWISE SPECIFIED DIMENSIONS ARE IN INCHES	ORIGINAL DATE OF DRAWING 83 08 08	U S ARMY ARMAMENT RESEARCH AND DEVELOPMENT CENTER DOVER NEW JERSEY 07801
APPLICATION		YP TS EL2 RA BH RH	TOLERANCES ON DECIMALS ± FRACTIONS ± ANGLES ±	DRAFTSMAN / CHECKER ENGR / ENGR ENGR / ENGR	RIFLE, 5.56MM, M16A2 (OUTLINE DIMENSIONS)
					SIZE J FSCM NO. 19200 9381436
					SCALE 1/1 UNIT WT SHEET 1 of 1

REVISIONS					
MF	ZONE	LTR	DESCRIPTION	DATE	APPROVED
		A	SEE ERR HQR 10806	13 JUL 71	
		B	SEE ERR HQR 30707	20 JUN 73	RE

NOTES:
1. THIS DRAWING IS FOR INFORMATION ONLY — NOT TO BE USED FOR MANUFACTURE.
2. ALL DIMENSIONS ARE GIVEN AS MAX REFERENCES.
3. OUTLINE INCLUDES QUADRANT SIGHT.

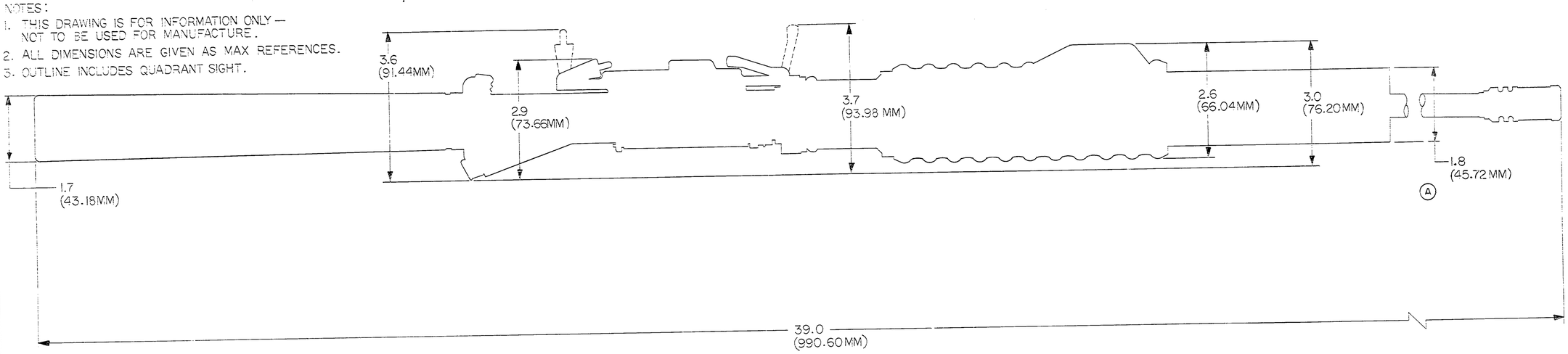

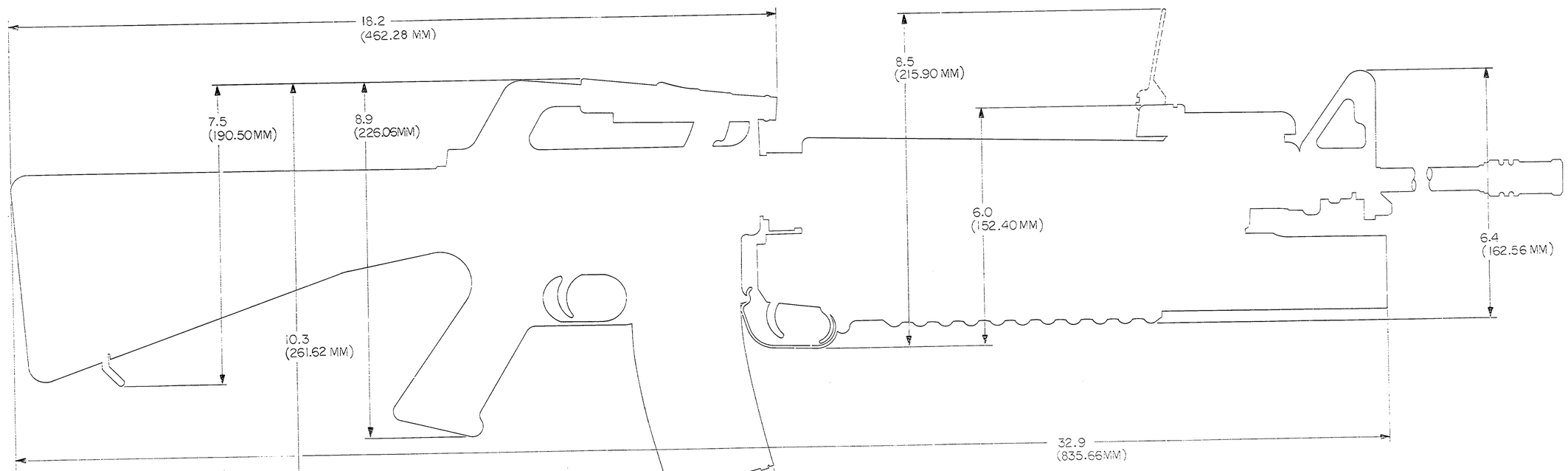

MECHANICAL PROPERTIES	
YS MIN	
YS MAX	
EL 2	
RA	
BH	
RH	

NEXT ASSY | USED ON
APPLICATION

UNLESS OTHERWISE SPECIFIED DIMENSIONS ARE IN INCHES
TOLERANCES:
ANGLES ±
2 PLACE DECIMALS ±
2 PLACE DECIMALS ±

MATERIAL

FINAL PROTECTIVE FINISH

CONTRACT NO.

DATE 10 JUN 71
PREPARED
CHECKED
ENGINEER
SUBMITTED
APPROVED

DEPT OF THE ARMY
U.S. ARMY WEAPONS COMMAND
ROCK ISLAND, ILLINOIS, 61201

LAUNCHER, GRENADE, 40MM
M203 WITH M16A1 RIFLE
(OUTLINE DIMENSIONS)

SIZE	CODE IDENT NO.	DRAWING NO.
F	19204	8448698

SCALE 1/1 | SHEET 1 OF 1

F8448698

REVISION HISTORY				
ZONE	REV	DESCRIPTION	DATE	APPROVED
	–	PRODUCT BASELINE ERR L9S3010	990622	RJC

NOTES:

1. APPLICABLE STANDARDS/SPECIFICATIONS:
   A. MIL–STD–100
   B. ASME Y14.5M–1994

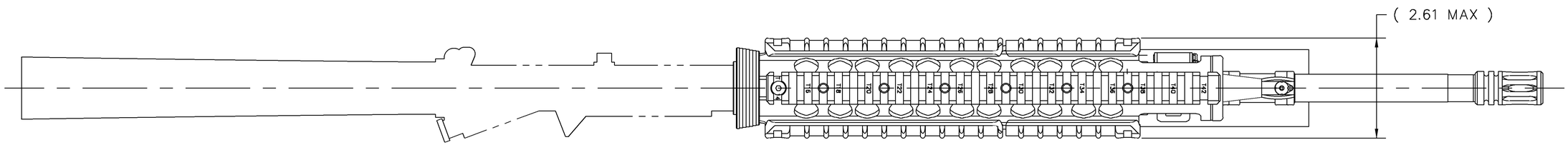

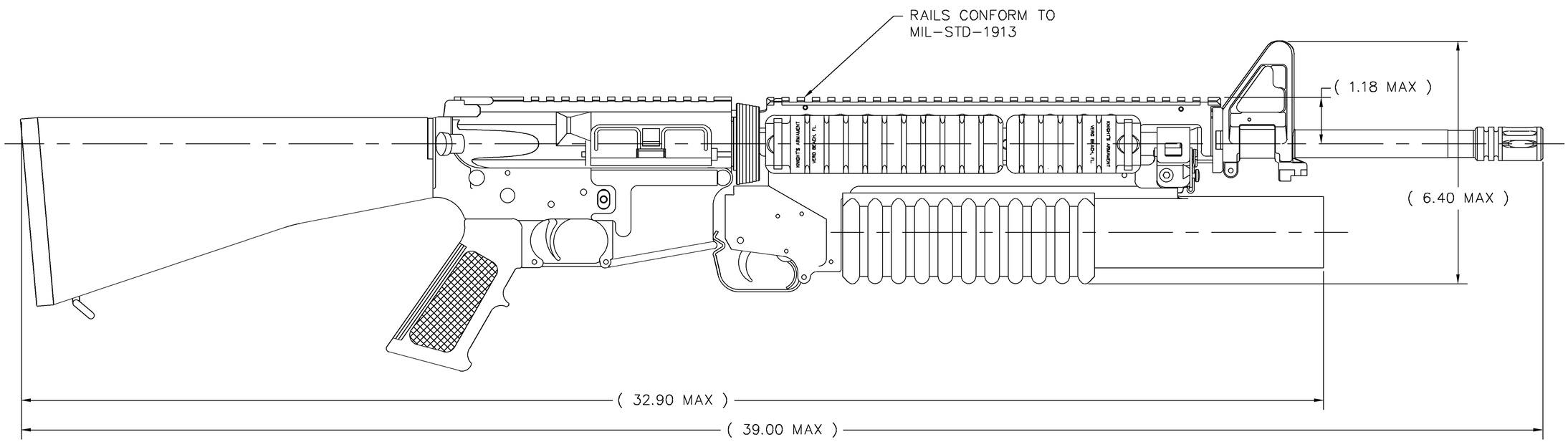

ENVELOPE DRAWING

PART NO.

MECHANICAL PROPERTIES	
YP	
TS	
EL2	
RA	
BH	
RH	

NEXT ASSY	USED ON
APPLICATION	

DO NOT SCALE DRAWING

UNLESS OTHERWISE SPECIFIED DIMENSIONS ARE IN INCHES

TOLERANCES ON DECIMALS ±
FRACTIONS ± ANGLES ±

THIRD ANGLE PROJECTION

ORGINAL DATE OF DRAWING: 98–10–06

DRAWN BY	CHECKER
MGA	
ENGINEER	ENGINEER
ENGINEER	ENGINEER

DRAWING APPROVAL

DESIGN APPROVAL

U. S. ARMY
ARMAMENT RESEARCH, DEVELOPMENT AND ENGINEERING CENTER
PICATINNY ARSENAL, NEW JERSEY 07806–5000

M16A4 RIFLE,
M5 ADAPTER RAIL SYSTEM
M203 QUICK RELEASE BRACKET

SIZE	CAGE CODE	DRAWING NO.	REV
D	19200	12973038	–

SCALE NONE | SHEET 1 OF 1

DISTRIBUTION STATEMENT A
APPROVED FOR PUBLIC RELEASE;
DISTRIBUTION IS UNLIMITED

DWG NO. 12973038

REVISION HISTORY				
ZONE	REV	DESCRIPTION	DATE	APPROVED
	–	PRODUCT BASELINE ERR L9S3010	990622	RJC

NOTES:

1. APPLICABLE STANDARDS/SPECIFICATIONS:
   A. MIL–STD–100
   B. ASME Y14.5M–1994

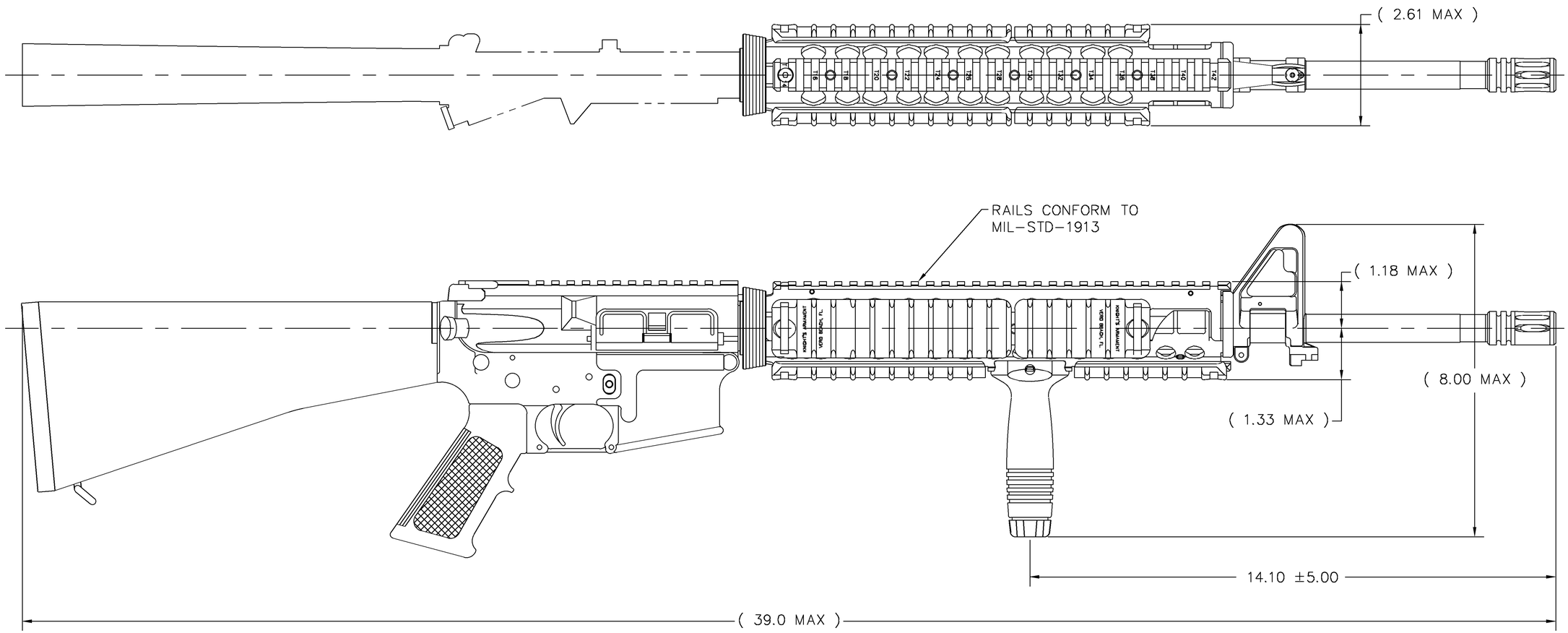

ENVELOPE DRAWING

PART NO.

MECHANICAL PROPERTIES	
YP	
TS	
EL2	
RA	
BH	
RH	

NEXT ASSY	USED ON
APPLICATION	

DO NOT SCALE DRAWING

UNLESS OTHERWISE SPECIFIED DIMENSIONS ARE IN INCHES

TOLERANCES ON DECIMALS ±
FRACTIONS ± ANGLES ±

THIRD ANGLE PROJECTION

ORGINAL DATE OF DRAWING: 98–10–05

DRAWN BY	CHECKER
MGA	
ENGINEER	ENGINEER
ENGINEER	ENGINEER

DRAWING APPROVAL: May 7 98

DESIGN APPROVAL: Emil Merz

U. S. ARMY
ARMAMENT RESEARCH, DEVELOPMENT AND ENGINEERING CENTER
PICATINNY ARSENAL, NEW JERSEY 07806–5000

M16A4 RIFLE,
M5 ADAPTER RAIL SYSTEM

SIZE	CAGE CODE	DRAWING NO.	REV
D	19200	12973039	–

SCALE NONE | SHEET 1 OF 1

DISTRIBUTION STATEMENT A
APPROVED FOR PUBLIC RELEASE;
DISTRIBUTION IS UNLIMITED

DWG NO. 12973039

REVISION HISTORY				
ZONE	REV	DESCRIPTION	DATE	APPROVED
	–	PRODUCT BASELINE ERR L9S3010	990622	RJC

NOTES:

1. APPLICABLE STANDARDS/SPECIFICATIONS:
   A. MIL–STD–100
   B. ASME Y14.5M–1994

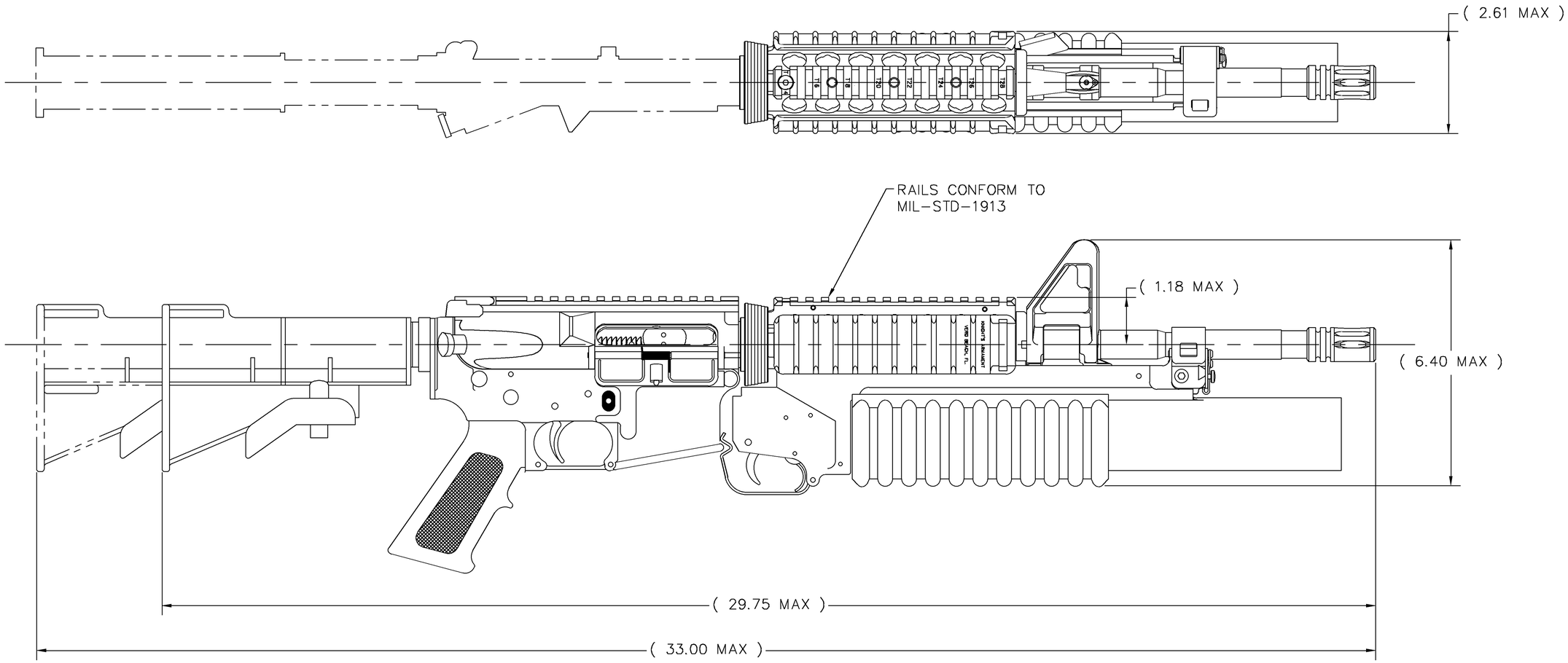

ENVELOPE DRAWING

PART NO.

MECHANICAL PROPERTIES	
YP	
TS	
EL2	
RA	
BH	
RH	

NEXT ASSY	USED ON
APPLICATION	

DO NOT SCALE DRAWING

UNLESS OTHERWISE SPECIFIED DIMENSIONS ARE IN INCHES

TOLERANCES ON DECIMALS ±
FRACTIONS ± ANGLES ±

THIRD ANGLE PROJECTION

ORGINAL DATE OF DRAWING: 98–10–05

DRAWN BY	CHECKER
MGA	
ENGINEER	ENGINEER
ENGINEER	ENGINEER

DRAWING APPROVAL

DESIGN APPROVAL

U. S. ARMY
ARMAMENT RESEARCH, DEVELOPMENT AND ENGINEERING CENTER
PICATINNY ARSENAL, NEW JERSEY 07806–5000

M4 CARBINE
M4 ADAPTER RAIL SYSTEM
M203 QUICK RELEASE BRACKET

SIZE	CAGE CODE	DRAWING NO.	REV
D	19200	12973114	–

SCALE NONE | SHEET 1 OF 1

DISTRIBUTION STATEMENT A
APPROVED FOR PUBLIC RELEASE;
DISTRIBUTION IS UNLIMITED

DWG NO. 12973114